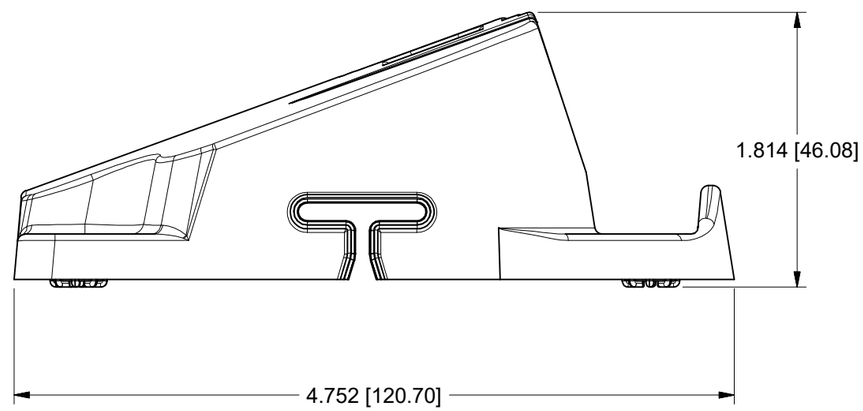

SIDE VIEW

BP-MOUNT-19, REV 1

DIMENSIONS ARE IN INCHES / [mm]

SCALE: 1/1