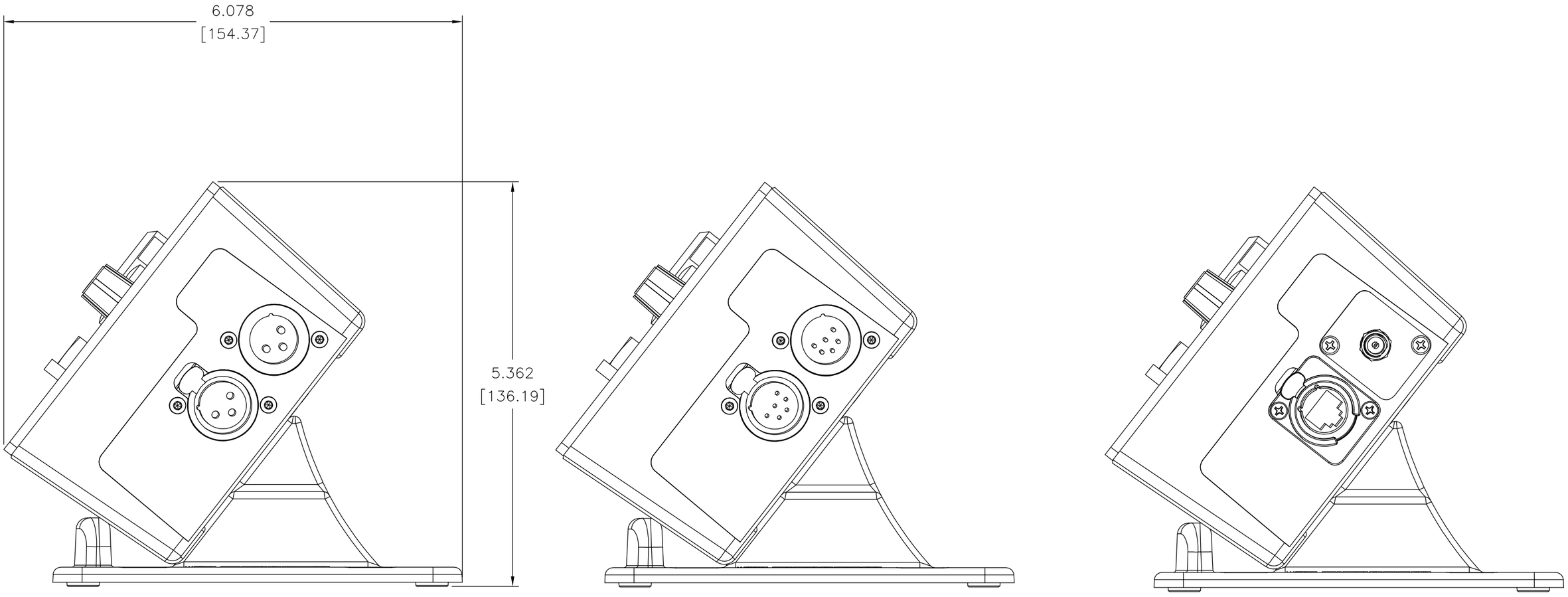

–X3

–X6

–RJ45

SIDE VIEW

U-BOX-19, Rev 1

Dimensions are in INCHES / [mm]

SCALE: 3:4

KB SHOWN FOR REFERENCE ONLY