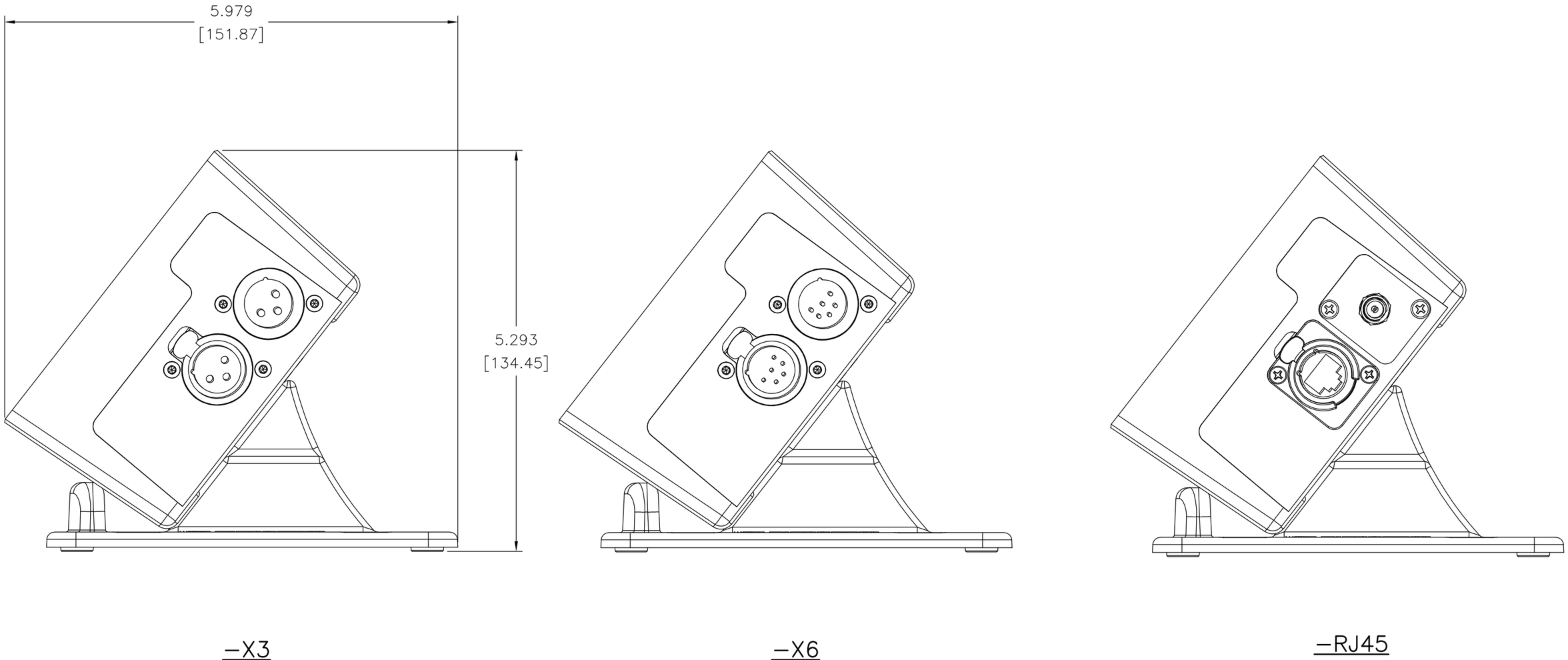

SIDE VIEW

U-BOX-19, Rev 1

Dimensions are in INCHES / [mm]

SCALE: 3:4