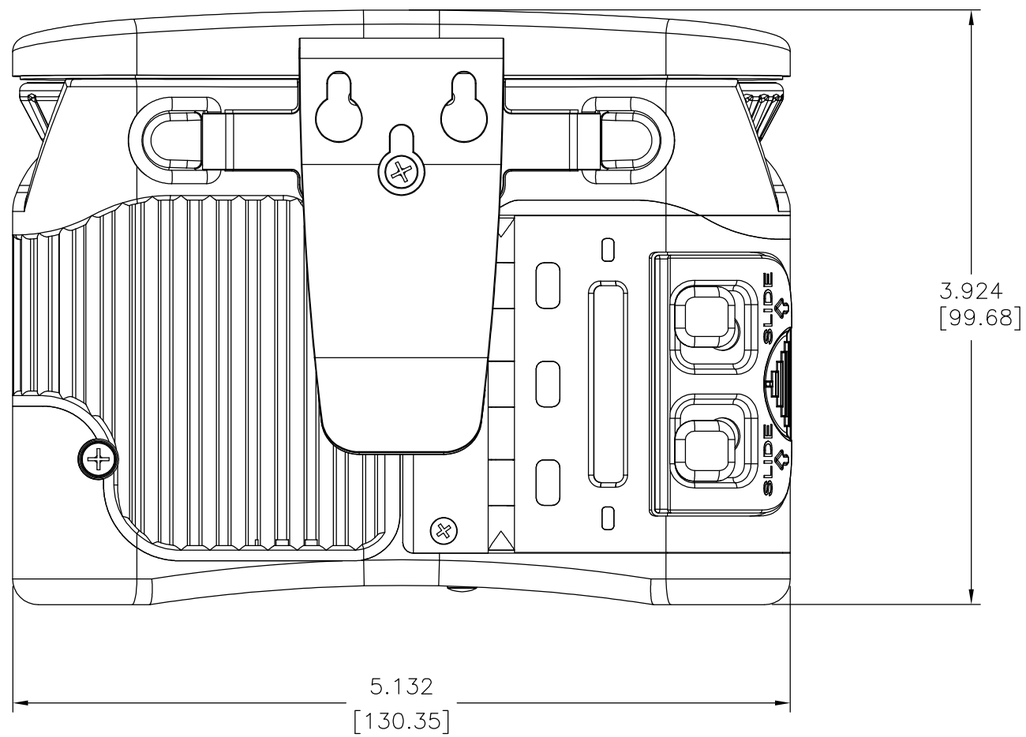

BACK VIEW

FSII-BP-19, Rev 2

Dimensions are in INCHES / [mm]

SCALE: 1/1