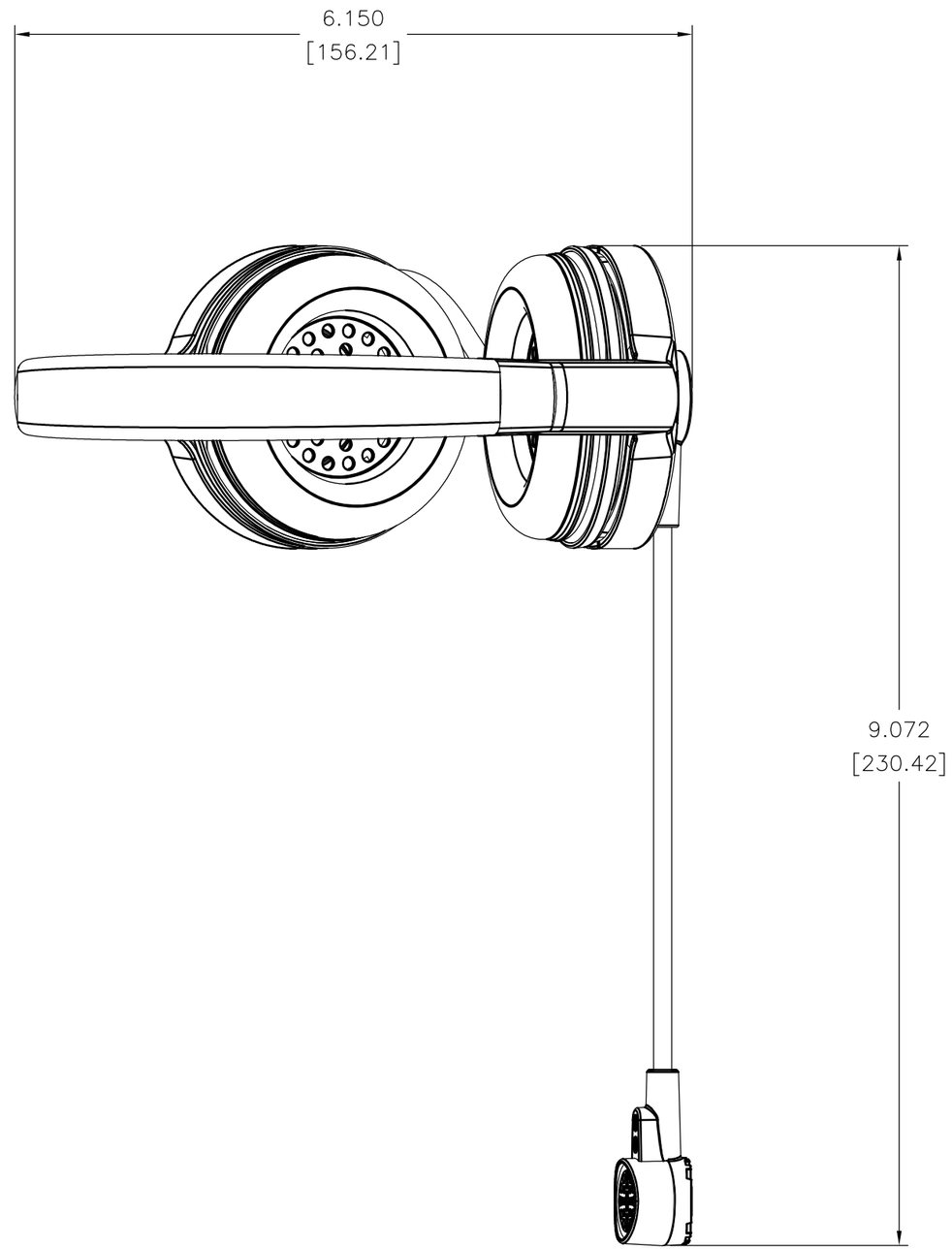


# TOP VIEW

CC-220-19, Rev 1

Dimensions are in INCHES / [mm]

SCALE: 3/4