HXII-BP-X4

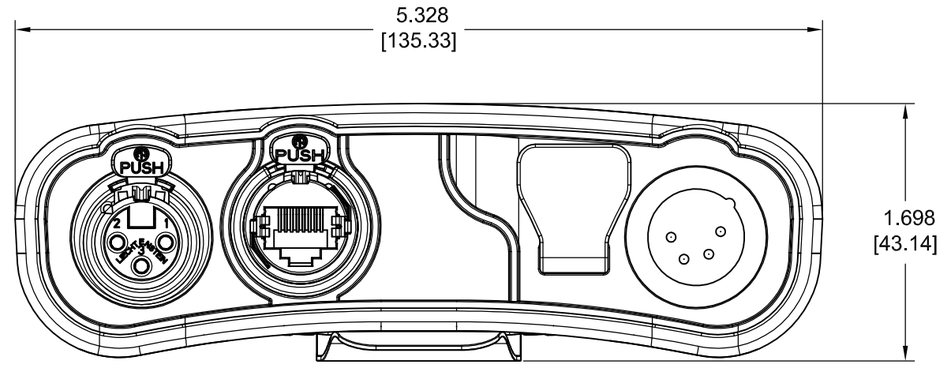

HXII-BP-X5

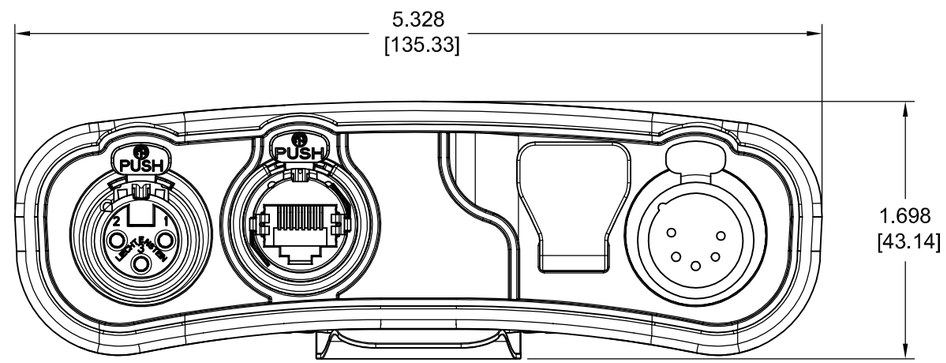

BOTTOM VIEW

HXII-19, Rev 2

Dimensions are in INCHES / [mm]

SCALE: 1/1